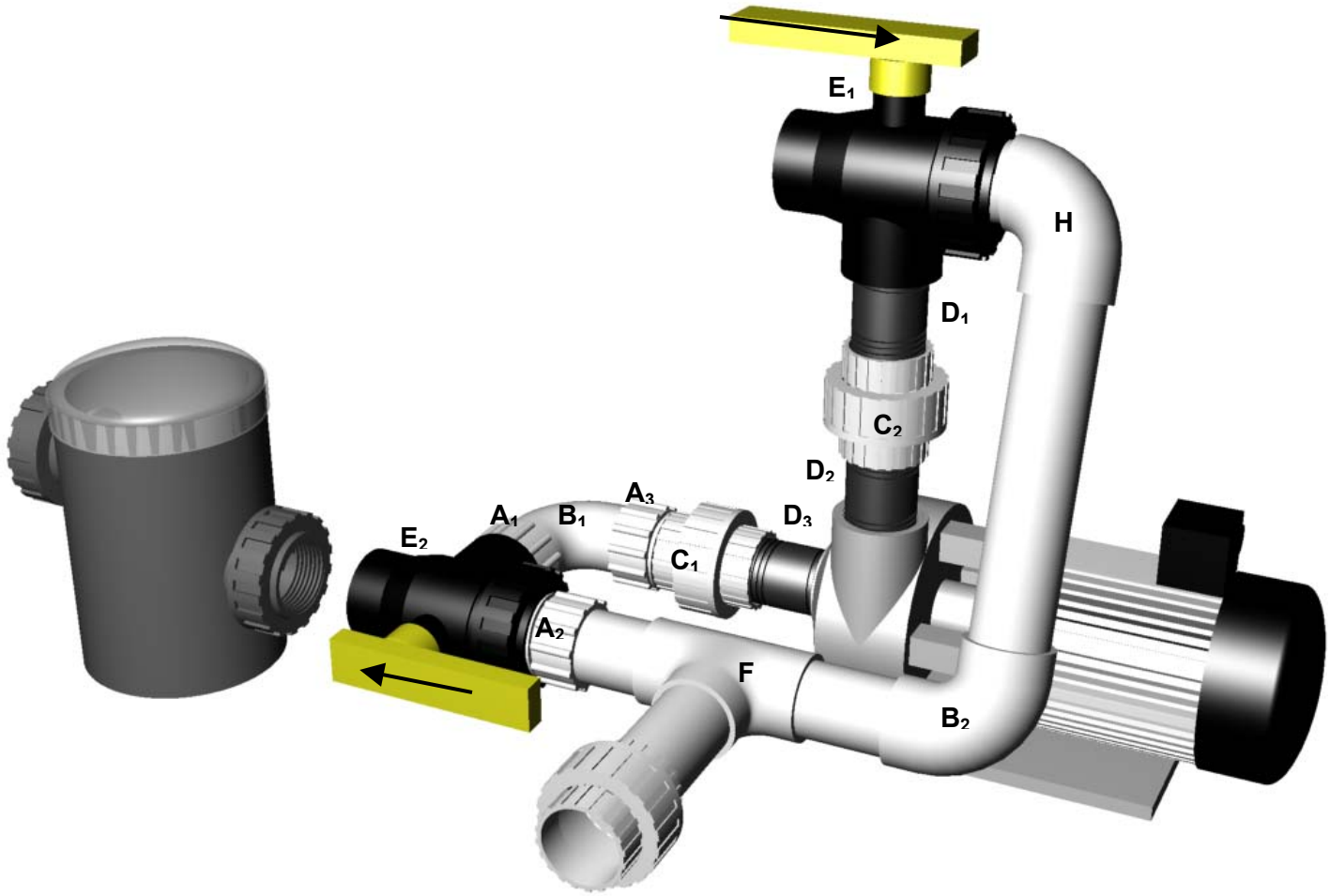

Pump assisted backwash plumbing configuration. Note: valves positioned for normal operation.

KIT CONTENTS*			PLUMBING SIZES			
Item	**Description**	**Qty**	**XS300A/XS500**	**XS1000**	**XS2000/XS4000**	**XS8000/10K/12K**
A	Male Adapter	3	¾”	1”	1-1/2”	2”
B	90° Ell (Slip)	2	¾”	1”	1-1/2”	2”
C	Union (threaded)	2	¾”	1”	1-1/2”	2”
D	Close Nipple**	3	¾”	1”	1-1/2”	2”
E	3-way Ball Valve***	2	¾”	1”	1-1/2”	2”
F	Tee (slip)	1	¾”	1”	1-1/2”	2”
G	Reducing Union (s x sp)	1	N/A	N/A	1-1/2” x 2”	2” x 2-1/2”
H	90° Street Ell (t x s)	1	¾”	1”	1-1/2”	2”

* PVC Pipe not included

** May require a threaded x threaded reducer bushing depending on pump suction and discharge size.

*** Kit for model BBF-XS300A, BBF-XS500 and BBF-XS1000 includes only one (1) 3-way ball valve since one is included with the filter as standard equipment.

**** Pump strainer basket not included.